C195-NFTM

CNT-195 CNT® Jumper with interface types N Female and TNC Male, variable length

OBSOLETE

This product was discontinued on: August 14, 2022

Product Classification

Product Type	Braided cable assembly
Product Brand	CNT®
Product Series	CNT-195

General Specifications

Body Style, Connector A	Straight
Body Style, Connector B	Straight
Cable Family	CNT-195
Interface, Connector A	N Female
Interface, Connector B	TNC Male
Specification Sheet Revision Level	A
Variable Length	For custom lengths contact 828-324-2200 or 1-800-982-1708 (toll free), or your local CommScope representative

Dimensions

Length	0 m | 0 ft
Nominal Size	0.195 in

VSWR/Return Loss

Frequency Band	VSWR	Return Loss (dB)
700–3000 MHz	1.433	14.99

©2022 CommScope, Inc. All rights reserved. All trademarks identified by ® or ™ are registered trademarks, respectively, of CommScope. All specifications are subject to change without notice. See www.commscope.com for the most current information. Revised: August 15, 2022

Jumper Assembly Sample Label

Regulatory Compliance/Certifications

Agency	Classification
ISO 9001:2015	Designed, manufactured and/or distributed under this quality management system

Included Products

195PNF-CR	–	Type N Female for CNT-195 braided cable
195PTM	–	TNC Male for CNT-195 braided cable
419001003/10 CNT-195-P-6G	–	CNT-195, CNT® 50 Ohm Braided Coaxial Cable,white plenum CMP(ETL) C(ETL), fire retardant.
CNT-195-FR	–	CNT-195-FR, CNT® 50 Ohm Braided Coaxial Cable, black non-halogenated, fire retardant polyolefin jacket, Dca s2 d2 Compliant
CNT-195-P	–	CNT-195, CNT® 50 Ohm Braided Coaxial Cable,white plenum CMP(ETL) C(ETL), fire retardant.

©2022 CommScope, Inc. All rights reserved. All trademarks identified by ® or ™ are registered trademarks, respectively, of CommScope. All specifications are subject to change without notice. See www.commscope.com for the most current information. Revised: August 15, 2022

195PNF-CR

Type N Female for CNT-195 braided cable

Product Classification

Product Type	Braided cable connector
Product Brand	CNT®

General Specifications

Body Style	Straight
Inner Contact Attachment Method	Solder
Inner Contact Plating	Silver
Interface	N Female
Outer Contact Attachment Method	Crimp
Outer Contact Plating	Trimetal

Dimensions

Width	17.6 mm | 0.693 in
Length	36.62 mm | 1.442 in
Diameter	17.6 mm | 0.693 in
Nominal Size	0.195 in

Outline Drawing

©2022 CommScope, Inc. All rights reserved. All trademarks identified by ® or ™ are registered trademarks, respectively, of CommScope. All specifications are subject to change without notice. See www.commscope.com for the most current information. Revised: August 12, 2022

195PNF-CR

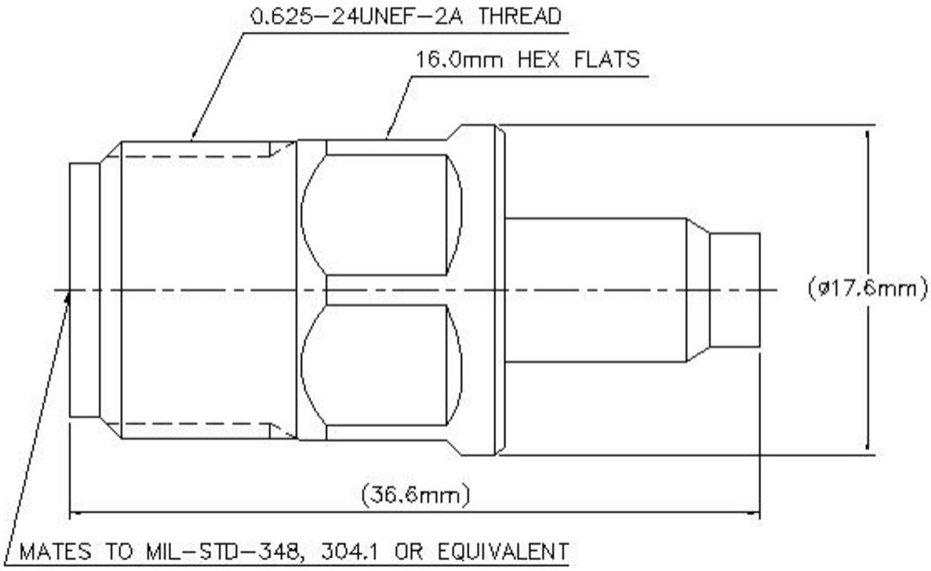

Electrical Specifications

Insertion Loss, typical	0.05 dB
Cable Impedance	50 ohm
Connector Impedance	50 ohm
dc Test Voltage	1000 V
Inner Contact Resistance, maximum	1 mOhm
Insulation Resistance, minimum	5000 MOhm
Operating Frequency Band	0 – 6000 MHz
Outer Contact Resistance, maximum	0.25 mOhm
Peak Power, maximum	2.5 kW
RF Operating Voltage, maximum (vrms)	353 V

VSWR/Return Loss

Frequency Band	VSWR	Return Loss (dB)
0–3000 MHz	1.094	26.96
3000–6000 MHz	1.173	21.99

Mechanical Specifications

Connector Retention Tensile Force	134 N | 30.124 lbf
Connector Retention Torque	0.17 N-m | 1.505 in lb

©2022 CommScope, Inc. All rights reserved. All trademarks identified by ® or ™ are registered trademarks, respectively, of CommScope. All specifications are subject to change without notice. See www.commscope.com for the most current information. Revised: August 12, 2022

Interface Durability	500 cycles
Interface Durability Method	IEC 61169-16:9.5
Mechanical Shock Test Method	IEC 60068-2-27

Environmental Specifications

Operating Temperature	-40 °C to +85 °C (-40 °F to +185 °F)
Storage Temperature	-65 °C to +125 °C (-85 °F to +257 °F)
Attenuation, Ambient Temperature	20 °C | 68 °F
Average Power, Ambient Temperature	40 °C | 104 °F
Average Power, Inner Conductor Temperature	100 °C | 212 °F
Climatic Sequence Test Method	IEC 60068-1
Corrosion Test Method	IEC 60068-2-11
Damp Heat Steady State Test Method	IEC 60068-2-3
Thermal Shock Test Method	IEC 60068-2-14
Vibration Test Method	IEC 60068-2-6
Water Jetting Test Mating	Mated
Water Jetting Test Method	IEC 60529:2001, IP65

Packaging and Weights

Weight, net	38 g | 0.084 lb

Regulatory Compliance/Certifications

Agency	Classification
CHINA-ROHS	Below maximum concentration value
ISO 9001:2015	Designed, manufactured and/or distributed under this quality management system
REACH-SVHC	Compliant as per SVHC revision on www.commscope.com/ProductCompliance
ROHS	Compliant

* Footnotes

Insertion Loss, typical	0.05√¯freq (GHz) (not applicable for elliptical waveguide)

©2022 CommScope, Inc. All rights reserved. All trademarks identified by ® or ™ are registered trademarks, respectively, of CommScope. All specifications are subject to change without notice. See www.commscope.com for the most current information. Revised: August 12, 2022

195PTM

TNC Male for CNT-195 braided cable

Product Classification

Product Type	Braided cable connector
Product Brand	CNT®

General Specifications

Body Style	Straight
Inner Contact Attachment Method	Solder
Inner Contact Plating	Silver
Interface	TNC Male
Outer Contact Attachment Method	Clamp
Outer Contact Plating	Silver

Dimensions

Width	16.5 mm | 0.65 in
Length	33.51 mm | 1.319 in
Diameter	16.5 mm | 0.65 in
Nominal Size	0.195 in

Outline Drawing

©2022 CommScope, Inc. All rights reserved. All trademarks identified by ® or ™ are registered trademarks, respectively, of CommScope. All specifications are subject to change without notice. See www.commscope.com for the most current information. Revised: August 12, 2022

195PTM

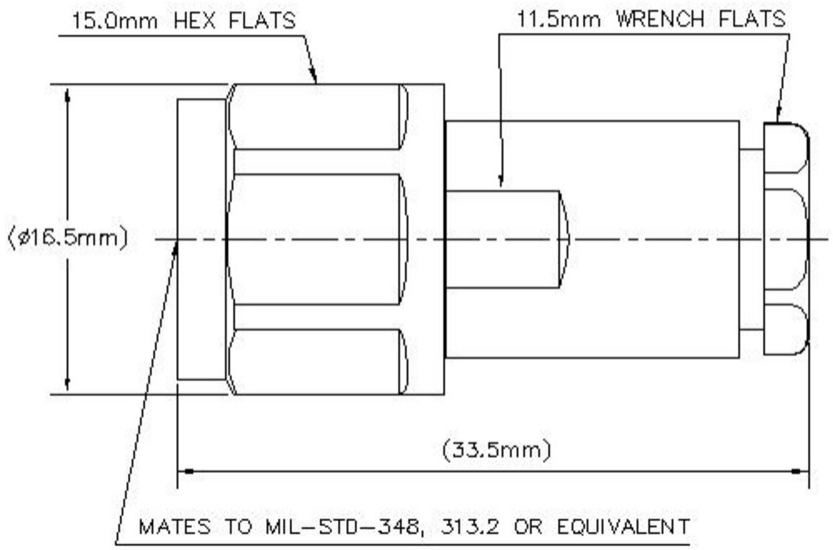

Electrical Specifications

Insertion Loss, typical	0.05 dB
Cable Impedance	50 ohm
Connector Impedance	50 ohm
dc Test Voltage	1000 V
Inner Contact Resistance, maximum	1.5 mOhm
Insulation Resistance, minimum	5000 MOhm
Operating Frequency Band	0 – 6000 MHz
Outer Contact Resistance, maximum	0.4 mOhm
Peak Power, maximum	2.5 kW
RF Operating Voltage, maximum (vrms)	353 V

VSWR/Return Loss

Frequency Band	VSWR	Return Loss (dB)
0–3000 MHz	1.065	30.05
3000–6000 MHz	1.119	25.02

Mechanical Specifications

Connector Retention Tensile Force	134 N | 30.124 lbf
Connector Retention Torque	0.17 N-m | 1.505 in lb

©2022 CommScope, Inc. All rights reserved. All trademarks identified by ® or ™ are registered trademarks, respectively, of CommScope. All specifications are subject to change without notice. See www.commscope.com for the most current information. Revised: August 12, 2022

Coupling Nut Proof Torque	1.7 N-m | 15.046 in lb
Coupling Nut Proof Torque Method	IEC 61169-17:9.3.6
Coupling Nut Retention Force	445 N | 100.04 lbf
Coupling Nut Retention Force Method	IEC 61169-17:9.3.11
Interface Durability	500 cycles
Interface Durability Method	IEC 61169-17:9.5
Mechanical Shock Test Method	IEC 60068-2-27

Environmental Specifications

Operating Temperature	-40 °C to +85 °C (-40 °F to +185 °F)
Storage Temperature	-65 °C to +125 °C (-85 °F to +257 °F)
Attenuation, Ambient Temperature	20 °C | 68 °F
Average Power, Ambient Temperature	40 °C | 104 °F
Average Power, Inner Conductor Temperature	100 °C | 212 °F
Climatic Sequence Test Method	IEC 60068-1
Corrosion Test Method	IEC 60068-2-11
Damp Heat Steady State Test Method	IEC 60068-2-3
Immersion Depth	1 m
Immersion Test Mating	Mated
Immersion Test Method	IEC 60529:2001, IP68
Thermal Shock Test Method	IEC 60068-2-14
Vibration Test Method	IEC 60068-2-6

Packaging and Weights

Weight, net	30.18 g | 0.067 lb

Regulatory Compliance/Certifications

Agency	Classification
ISO 9001:2015	Designed, manufactured and/or distributed under this quality management system

* Footnotes

©2022 CommScope, Inc. All rights reserved. All trademarks identified by ® or ™ are registered trademarks, respectively, of CommScope. All specifications are subject to change without notice. See www.commscope.com for the most current information. Revised: August 12, 2022

Insertion Loss, typical	0.05√¯freq (GHz) (not applicable for elliptical waveguide)
Immersion Depth	Immersion at specified depth for 24 hours

©2022 CommScope, Inc. All rights reserved. All trademarks identified by ® or ™ are registered trademarks, respectively, of CommScope. All specifications are subject to change without notice. See www.commscope.com for the most current information. Revised: August 12, 2022

419001003/10 | CNT-195-P-6G

CNT-195, CNT® 50 Ohm Braided Coaxial Cable,white plenum CMP(ETL) C(ETL), fire retardant.

Product Classification

Product Type	Braided coaxial cable
Product Brand	CNT®
Product Series	CNT-195

General Specifications

Braid Coverage	89 %
Cable Type	CNT-195
Jacket Color	White

Dimensions

Diameter Over Dielectric	2.79 mm | 0.11 in
Diameter Over Jacket	4.32 mm | 0.17 in
Inner Conductor OD	0.94 mm | 0.037 in
Outer Conductor OD	3.53 mm | 0.139 in

Electrical Specifications

Cable Impedance	50 ohm
Capacitance	87.2 pF/m | 26.579 pF/ft
dc Resistance, Inner Conductor	25.4 ohms/km | 7.742 ohms/kft
dc Resistance, Outer Conductor	16.08 ohms/km | 4.901 ohms/kft
dc Test Voltage	2000 V
Jacket Spark Test Voltage (rms)	2000 V
Maximum Frequency	37.9 GHz
Operating Frequency Band	1 – 6000 MHz

©2022 CommScope, Inc. All rights reserved. All trademarks identified by ® or ™ are registered trademarks, respectively, of CommScope. All specifications are subject to change without notice. See www.commscope.com for the most current information. Revised: August 12, 2022

Peak Power	2.5 kW
Shielding Effectiveness	90 dB
Velocity	75 %

VSWR/Return Loss

Frequency Band	VSWR	Return Loss (dB)
100–6000 MHz	1.38	16

Material Specifications

Braid Material	Tinned copper
Dielectric Material	Foam FEP
Jacket Material	Fire retardant PVC
Inner Conductor Material	Copper
Shield Tape Material	Aluminum

Mechanical Specifications

Minimum Bend Radius, single Bend	12.7 mm | 0.5 in
Tensile Strength	18 kg | 39.683 lb
Bending Moment	0.1 N-m | 0.885 in lb
Flat Plate Crush Strength	0.3 kg/mm | 16.799 lb/in

Environmental Specifications

Installation temperature	-40 °C to +75 °C (-40 °F to +167 °F)
Operating Temperature	-40 °C to +75 °C (-40 °F to +167 °F)
Storage Temperature	-40 °C to +75 °C (-40 °F to +167 °F)

Packaging and Weights

Cable weight	0.04 kg/m | 0.027 lb/ft
Packaging Type	Reel

Regulatory Compliance/Certifications

Agency	Classification
ISO 9001:2015	Designed, manufactured and/or distributed under this quality management system

ISO 9001:2015

©2022 CommScope, Inc. All rights reserved. All trademarks identified by ® or ™ are registered trademarks, respectively, of CommScope. All specifications are subject to change without notice. See www.commscope.com for the most current information. Revised: August 12, 2022

COMMSCOPE®

©2022 CommScope, Inc. All rights reserved. All trademarks identified by ® or ™ are registered trademarks, respectively, of CommScope. All specifications are subject to change without notice. See www.commscope.com for the most current information. Revised: August 12, 2022

CNT-195-FR

CNT-195-FR, CNT® 50 Ohm Braided Coaxial Cable, black non-halogenated, fire retardant polyolefin jacket, Dca s2 d2 Compliant

Product Classification

Product Type	Braided coaxial cable
Product Brand	CNT®
Product Series	CNT-195

General Specifications

Braid Coverage	89 %
Cable Type	CNT-195
Jacket Color	Black

Dimensions

Diameter Over Dielectric	2.79 mm | 0.11 in
Diameter Over Jacket	4.95 mm | 0.195 in
Inner Conductor OD	0.94 mm | 0.037 in
Outer Conductor OD	3.5 mm | 0.138 in
Nominal Size	0.195 in

Electrical Specifications

Cable Impedance	50 ohm
Capacitance	79.7 pF/m | 24.293 pF/ft
dc Resistance, Inner Conductor	25.5 ohms/km | 7.772 ohms/kft
dc Resistance, Outer Conductor	16.08 ohms/km | 4.901 ohms/kft
dc Test Voltage	1500 V
Jacket Spark Test Voltage (rms)	3000 V
Maximum Frequency	37.9 GHz

©2022 CommScope, Inc. All rights reserved. All trademarks identified by ® or ™ are registered trademarks, respectively, of CommScope. All specifications are subject to change without notice. See www.commscope.com for the most current information. Revised: August 12, 2022

Operating Frequency Band	30 – 6000 MHz
Peak Power	2.5 kW
Shielding Effectiveness	90 dB
Velocity	75 %

Material Specifications

Braid Material	Tinned copper
Dielectric Material	Foam PE
Jacket Material	Non-halogenated, fire retardant polyolefin
Inner Conductor Material	Copper
Shield Tape Material	Aluminum

Mechanical Specifications

Minimum Bend Radius, single Bend	12.7 mm | 0.5 in
Tensile Strength	18 kg | 39.683 lb
Bending Moment	0.3 N-m | 2.655 in lb
Flat Plate Crush Strength	0.3 kg/mm | 16.799 lb/in

Environmental Specifications

Installation temperature	-40 °C to +60 °C (-40 °F to +140 °F)
Operating Temperature	-40 °C to +60 °C (-40 °F to +140 °F)
Storage Temperature	-40 °C to +60 °C (-40 °F to +140 °F)
EN50575 CPR Cable EuroClass Fire Performance	Dca
EN50575 CPR Cable EuroClass Smoke Rating	s2
EN50575 CPR Cable EuroClass Droplets Rating	d2
Smoke Index Test Method	IEC 61034
Toxicity Index Test Method	IEC 60754-2

Packaging and Weights

Cable weight	0.03 kg/m | 0.02 lb/ft
Packaging Type	Reel

Regulatory Compliance/Certifications

Agency	Classification

©2022 CommScope, Inc. All rights reserved. All trademarks identified by ® or ™ are registered trademarks, respectively, of CommScope. All specifications are subject to change without notice. See www.commscope.com for the most current information. Revised: August 12, 2022

CNT-195-FR

CENELEC	EN 50575 compliant, Declaration of Performance (DoP) available
CHINA-ROHS	Below maximum concentration value
ISO 9001:2015	Designed, manufactured and/or distributed under this quality management system
REACH-SVHC	Compliant as per SVHC revision on www.commscope.com/ProductCompliance
ROHS	Compliant

©2022 CommScope, Inc. All rights reserved. All trademarks identified by ® or ™ are registered trademarks, respectively, of CommScope. All specifications are subject to change without notice. See www.commscope.com for the most current information. Revised: August 12, 2022

CNT-195-P

CNT-195, CNT® 50 Ohm Braided Coaxial Cable,white plenum CMP(ETL) C(ETL), fire retardant.

Product Classification

Product Type	Braided coaxial cable
Product Brand	CNT®
Product Series	CNT-195

General Specifications

Braid Coverage	89 %
Cable Type	CNT-195
Jacket Color	White

Dimensions

Diameter Over Dielectric	2.79 mm | 0.11 in
Diameter Over Jacket	4.32 mm | 0.17 in
Inner Conductor OD	0.94 mm | 0.037 in
Outer Conductor OD	3.53 mm | 0.139 in

Electrical Specifications

Cable Impedance	50 ohm
Capacitance	87.2 pF/m | 26.579 pF/ft
dc Resistance, Inner Conductor	25.5 ohms/km | 7.772 ohms/kft
dc Resistance, Outer Conductor	16.08 ohms/km | 4.901 ohms/kft
dc Test Voltage	2000 V
Jacket Spark Test Voltage (rms)	2000 V
Maximum Frequency	37.9 GHz
Operating Frequency Band	30 – 6000 MHz

©2022 CommScope, Inc. All rights reserved. All trademarks identified by ® or ™ are registered trademarks, respectively, of CommScope. All specifications are subject to change without notice. See www.commscope.com for the most current information. Revised: August 12, 2022

CNT-195-P

Peak Power	2.5 kW
Shielding Effectiveness	90 dB
Velocity	75 %

Material Specifications

Braid Material	Tinned copper
Dielectric Material	Foam FEP
Jacket Material	Fire retardant PVC
Inner Conductor Material	Copper
Shield Tape Material	Aluminum

Mechanical Specifications

Minimum Bend Radius, single Bend	12.7 mm | 0.5 in
Tensile Strength	18 kg | 39.683 lb
Bending Moment	0.1 N-m | 0.885 in lb
Flat Plate Crush Strength	0.3 kg/mm | 16.799 lb/in

Environmental Specifications

Installation temperature	-40 °C to +75 °C (-40 °F to +167 °F)
Operating Temperature	-40 °C to +75 °C (-40 °F to +167 °F)
Storage Temperature	-40 °C to +75 °C (-40 °F to +167 °F)

Packaging and Weights

Cable weight	0.04 kg/m | 0.027 lb/ft
Packaging Type	Reel

Regulatory Compliance/Certifications

Agency	Classification
ISO 9001:2015	Designed, manufactured and/or distributed under this quality management system

ISO 9001:2015

©2022 CommScope, Inc. All rights reserved. All trademarks identified by ® or ™ are registered trademarks, respectively, of CommScope. All specifications are subject to change without notice. See www.commscope.com for the most current information. Revised: August 12, 2022

COMMSCOPE®